7801 Park Place Rd.
York, SC 29745 USA
(803) 628-2100

MPS Catalog Number **NPKG 10 XB 006 S0**

Date 4/28/2022

End Fittings

Tower End Fitting:	Gain Base GB-12/ 5 deg / Galv. Ductile Iron
Line End Fitting:	Trunnion / Galv. Ductile Iron

Material

Mounting Angle:		5 deg
Number of Sheds:		6
Rod Diameter:		1.50 in
Weight Estimate:	14.6 lbs	6.6 kg

Dimensional Values

Section Length (X):	18.4 in	468 mm
Shed Diameter (B):	4.1 in	105 mm
Shed Spacing (C):	2.0 in	51 mm
Trunnion Bolt (F):	5/8 in - 11 bolt & lockwasher	
Minimum Diameter (Z):	0.79 in	21 mm
Dry Arc Distance:	13.2 in	336 mm
Leakage Distance:	22.4 in	569 mm

Electricals Values

60 Hz dry Flashover:	141 kV	Min. Withstand	133 kV
60 Hz Wet Flashover:	122 kV	Min. Withstand	92 kV
Pos. Critical Impulse Flashover:	239 kV	Min. Withstand	206 kV
Neg. Critical Impulse Flashover:	309 kV	Min. Withstand	241 kV

Mechanical Values

Specified Tensile Load (STL):	5,000 lbs	22.2 kN
Max. Design Cant. Load (MDCL):	1,235 lbs	5.5 kN
Specified Cant. Load (SCL):	2,470 lbs	11.0 kN

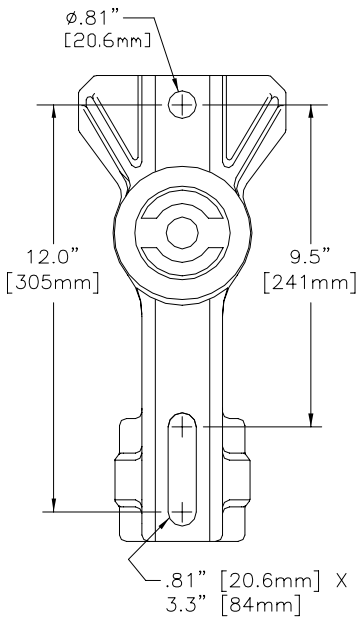

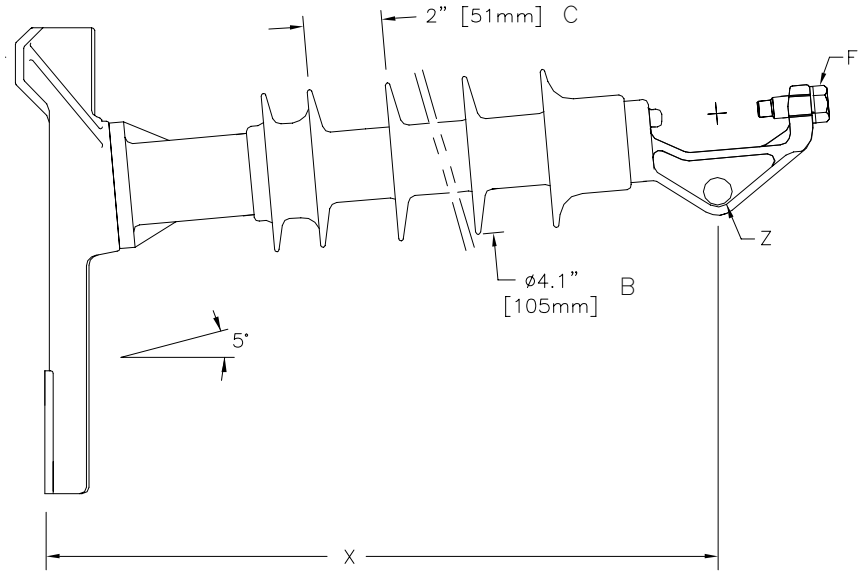

Dimension: inches [millimeters]

NOTE: Drawing not actual depiction of insulator appearance

Silicone Rubber Sheath & Sheds. Complies with applicable ANSI and IEC standards.

This drawing contains confidential information that is the property of MacLean Power, L.L.C. ("MacLean"). Use of MacLean's confidential information without MacLean's express written consent is strictly prohibited and may expose you to legal liability. If you believe that you received this material in error, please destroy it or return it to "MacLean Power, L.L.C., 7801 Park Place Rd., York, South Carolina 29745, USA."

Notes:

Prepared By: Stephen Lucci