7801 Park Place Rd.
York, SC 29745 USA
(803) 628-2100

MPS Catalog Number

NPKG 20 XG O11 S0

Date 4/29/2022

End Fittings

Tower End Fitting:	Gain Base GB-12/ 5 deg / Galv. Ductile Iron
Line End Fitting:	Trunnion / Galv. Ductile Iron

Material

Mounting Angle:		5 deg
Number of Sheds:		11
Rod Diameter:		1.75 in
Weight Estimate:	18.0 lbs	8.2 kg

Dimensional Values

Section Length (X):	21.4 in	544 mm
Shed Diameter (B1):	4.1 in	105 mm
Shed Diameter (B2):	4.7 in	120 mm
Shed Spacing (C):	2.0 in	51 mm
Trunnion Bolt (F):	5/8 in - 11 bolt & lockwasher	
Minimum Diameter (Z):	0.79 in	21 mm
Dry Arc Distance:	16.3 in	415 mm
Leakage Distance:	36.5 in	928 mm

Electricals Values

60 Hz dry Flashover:	169 kV	Min. Withstand	159 kV
60 Hz Wet Flashover:	149 kV	Min. Withstand	112 kV
Pos. Critical Impulse Flashover:	286 kV	Min. Withstand	246 kV
Neg. Critical Impulse Flashover:	366 kV	Min. Withstand	285 kV

Mechanical Values

Specified Tensile Load (STL):	5,000 lbs	22.2 kN
Max. Design Cant. Load (MDCL):	1,250 lbs	5.6 kN
Specified Cant. Load (SCL):	2,500 lbs	11.1 kN

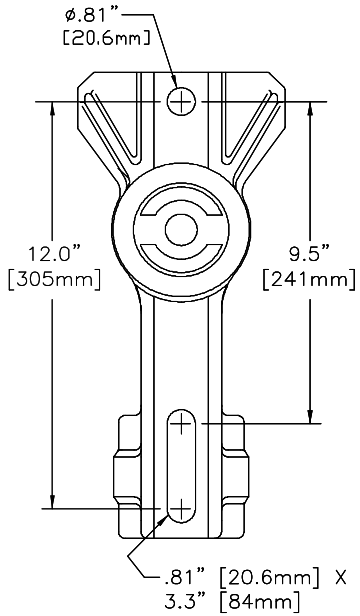

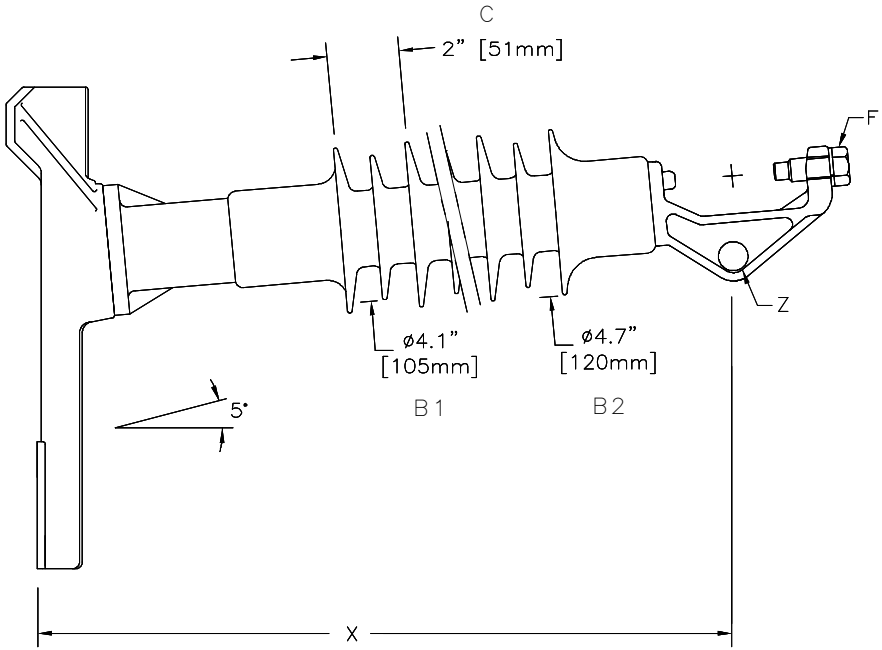

Dimension: inches [millimeters]

NOTE: Drawing not actual depiction of insulator appearance

Silicone Rubber Sheath & Sheds. Complies with applicable ANSI and IEC standards.

This drawing contains confidential information that is the property of MacLean Power, L.L.C. ("MacLean"). Use of MacLean's confidential information without MacLean's express written consent is strictly prohibited and may expose you to legal liability. If you believe that you received this material in error, please destroy it or return it to "MacLean Power, L.L.C., 7801 Park Place Rd., York, South Carolina 29745, USA."

Notes:

Prepared By: Stephen Lucci