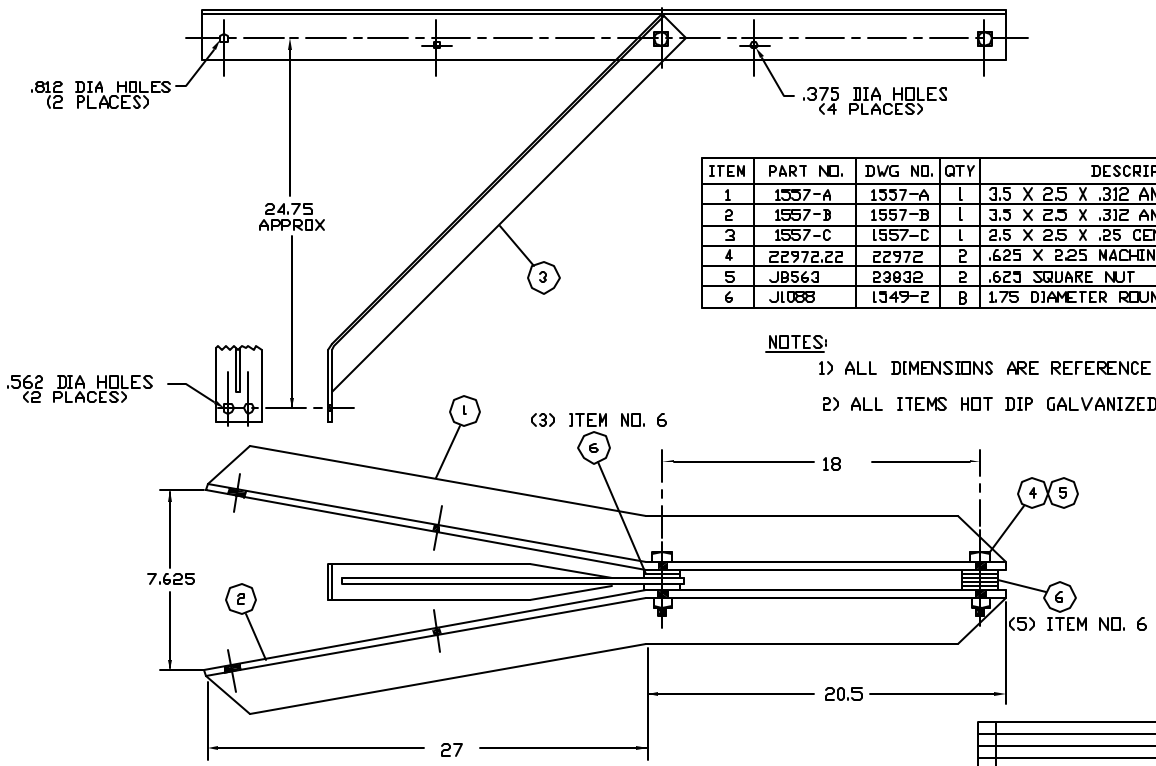

ITEM	PART NO.	DWG NO.	QTY	DESCRIPTION
1	1557-A	1557-A	1	3.5 X 2.5 X .312 ANGLE LEG
2	1557-B	1557-B	1	3.5 X 2.5 X .312 ANGLE LEG (R.S.)
3	1557-C	1557-C	1	2.5 X 2.5 X .25 CENTER TEE BRACE
4	22972.22	22972	2	.625 X 2.25 MACHINE BOLT
5	JB563	23032	2	.625 SQUARE NUT
6	J1088	1549-2	8	1.75 DIAMETER ROUND WASHER

NOTES:

1) ALL DIMENSIONS ARE REFERENCE AND ARE IN INCHES

2) ALL ITEMS HOT DIP GALVANIZED (ASTM A-153)

CUSTOMER DRAWING

CATALOG NO. J7921

JOSLYN

CABLE EXTENSION
ARM ASSEMBLY

DATE 7-11-05
DRAWN JB
CHECKED

DWG. NO. 1557-C

SCALE

SHEET 1 OF 1