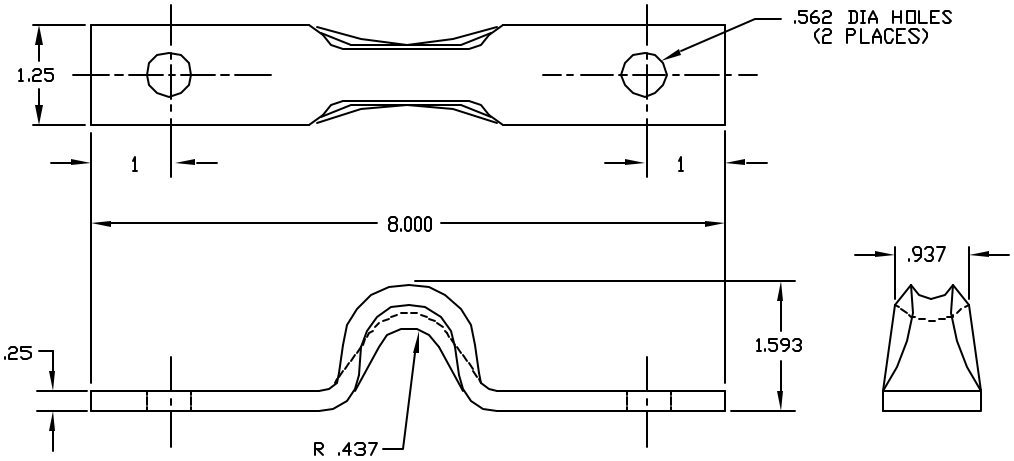

FINISH:

HOT DIP GALVANIZED (ASTM A-153)

NOTE:

ALL DIMENSIONS ARE IN INCHES

CUSTOMER DRAWING

NO.	REVISION	DATE	CK.

UNSPECIFIED DIMENSIONAL TOLERANCES
FRACTIONAL ± DECIMAL ± ANGULAR ±

SUPERSEDES:

THIS DRAWING IS THE PROPERTY OF JOSLYN MANUFACTURING CO. AND EMBODIES A CONFIDENTIAL PROPRIETARY DESIGN IN WHICH JOSLYN RETAINS ALL PATENTS AND PROPRIETARY RIGHTS, INCLUDING EXCLUSIVE RIGHT OF USE, MANUFACTURE AND SALE. BY ACCEPTING THIS DRAWING, THE RECIPIENT AGREES NOT TO DISCLOSE, REPRODUCE OR USE ANY INFORMATION CONTAINED HEREIN WITHOUT THE PRIOR WRITTEN CONSENT OF JOSLYN.

CATALOG NO. J7692

JOSLYN
MANUFACTURING CO.

WALL BRACKET

DATE 4-6-05
DRAWN JB
CHECKED
DWG. NO. 1782-C
SCALE:
SHEET 1 OF 1